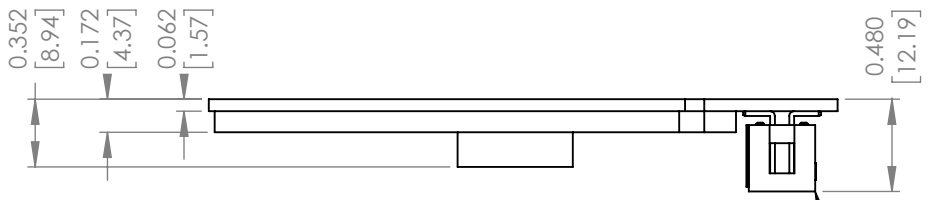

Connector: Sullins Corp
SBH11-NBPC-D12-SM-BK
Refer to Sullins documentation
for complete specifications.

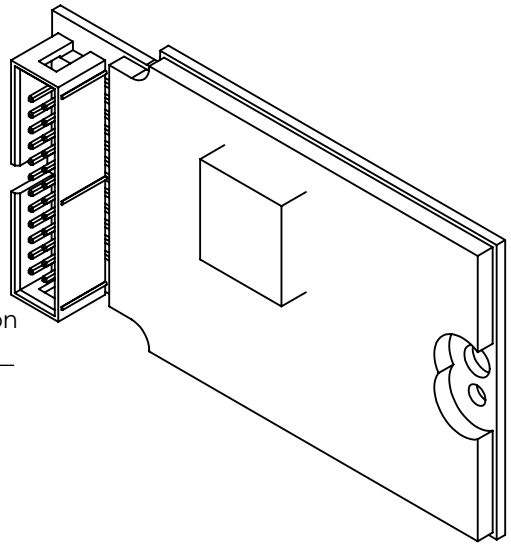

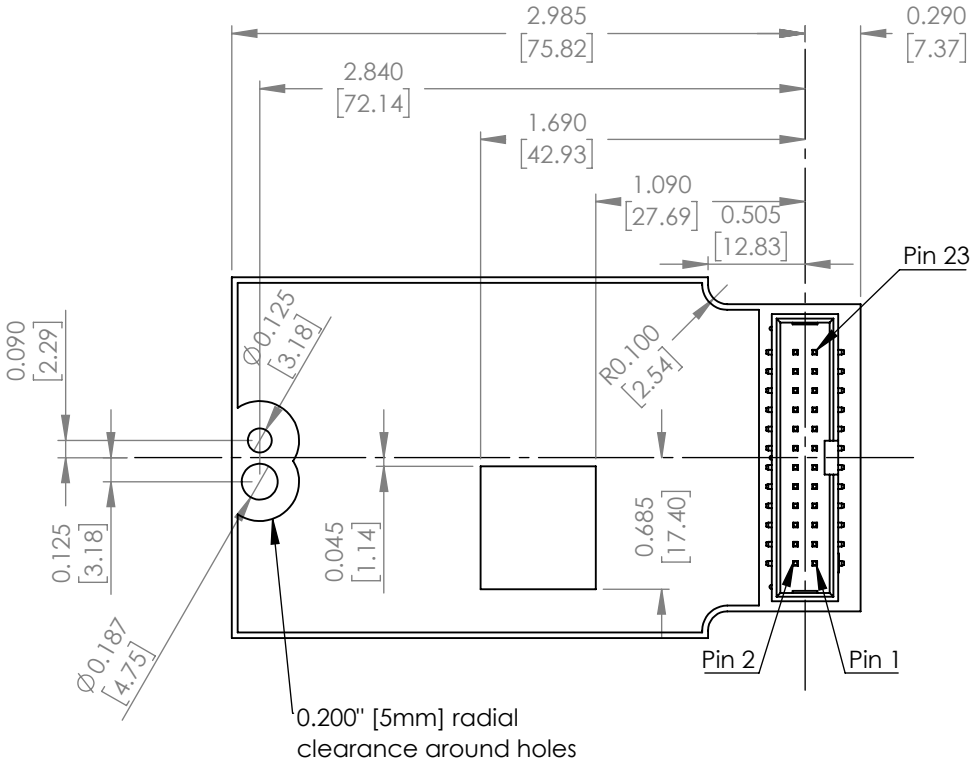

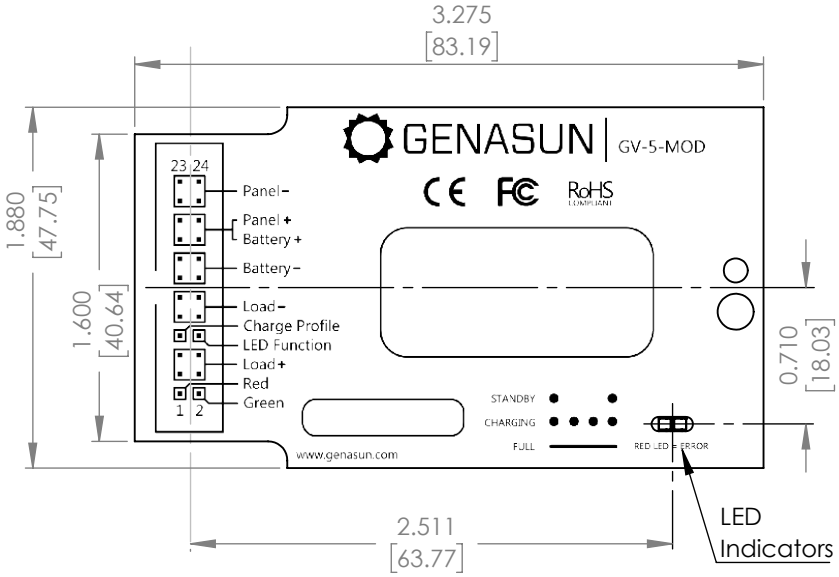

GENASUN

PROPRIETARY AND CONFIDENTIAL

THE INFORMATION CONTAINED IN THIS DRAWING IS THE SOLE PROPERTY OF SUNFORGE LLC, COPYRIGHT 2017.
www.genasun.com

Dimensions in inches [mm]

SIZE	DWG. NO.	
A	GV-5-MOD-2017-12-12	
SCALE: 1:1		SHEET 1 OF 1